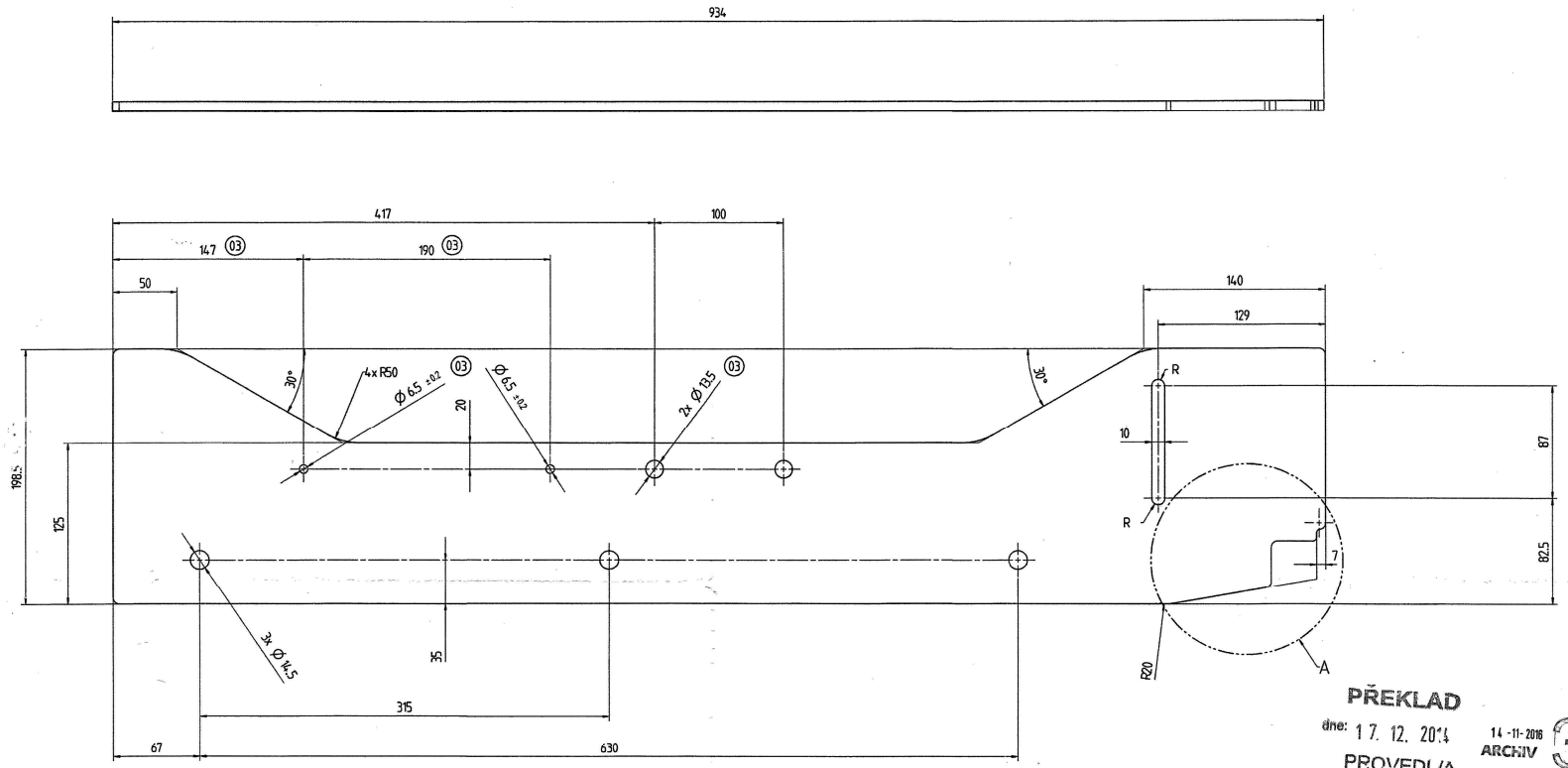

PŘEKLAD
dne: 17. 12. 2014
PROVEDL/A
V SNA

14-11-2016
ARCHIV
3

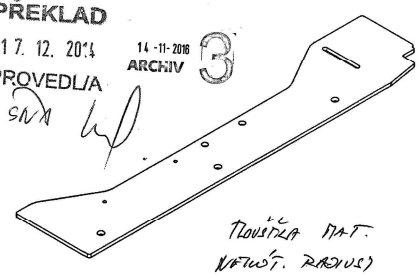

Detail A
1:1

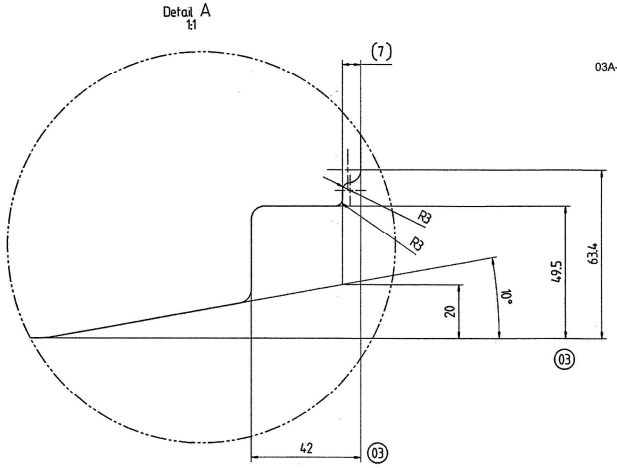

03A-ZM/16/01090-NA LISTU Č.2 ZOBRAZEN SKUTEČNÝ TVAR DÍLCE.

2.11.2016 HRUBÝ

TLOUŠŤKA MAT.
NEKÓT. RADIUSY
RADIUS OHYBU

NOTA :

- Metal sheet thickness : 8 mm
- Radii without dimension : R = 5
- Bend radii : R = 1

Nž 14/01402

Condition at time of delivery	
de-scaled (degree of purity SA 2 1/2 acc. ISO 8501-1)	X
without burrs acc. WN 11310	
Permissible top-end rounding during flame cutting (also positive bead acc. WN 10572)	
oil-free / free of grease	
oiled	
oiling permissible	X
Indicate the required condition at time of delivery with an X.	

LASER cutting tolerances					
NOTA : min cutting radius without dimensions R = 1 mm unless otherwise specified					
≤ 30	30< ≤ 120	120< ≤ 400	400< ≤ 1000	1000 <	
± 0,5	± 0,8	± 1,0	± 1,5	± 2,0	-0.5 / -0.5

First angle projection

General tolerance (GT) in mm
Size range: ≥ 30 ≤ 30 | > 30 ≤ 120 | > 120 ≤ 400 | > 400 ≤ 1000 | > 1000

GT coarse					
L	1	2	2	3	4
∢	1	2	4	6	

Lengths (L) and angle (L ∠) = ± GT

Tolerance Symbols ISO 1101
- ○ roundness = 1/2e-Tol.
- straightness/flatness = GT
- concentricity/run out = GT
- symmetry = GT
- parallelism = GT
- position = GT

Languages: en,fr

Index	alteration	Change no	Fit	Toler.
03	Ø12 --> Ø13.5	T62488		
	Adding cutting for battery bridge			
	Adding 2x Ø6.5			

Inspection dim.
Auxiliary dim. ( )

	Date	Name
Drawn	4.11.2014	J.Fonteny
Checked	12.11.2014	T.Malivert
Authd	17.11.2014	R.Pelletier
M.check.	17.11.2014	J.LeCesne

Confidential document
Refer to protection notice ISO 16016

Material: S235JR following EN10025-2
Blank no:
Title: battery holder
front
Weight: in kg 8.6
PROD.
Scale 1:2
Drawing number: 11914230100
Sheet: 1 of: 2
Repl.
Orig.
Approved
11914230100d001
A1